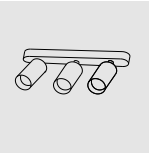

LED DOWNLIGHT

VEC-46231/VEC-46232

VECTA

WARNING

1.Switch off before installation.
2.Switch on only after complete installation and examination of the circuit.
3.Professional electrician for installation and maintenance only.

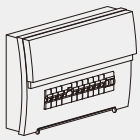

step 1. Install the light source GU10

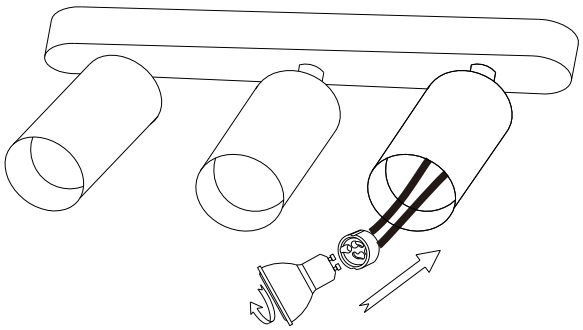

Step2.Fix the ceiling plate to the ceiling with screws.

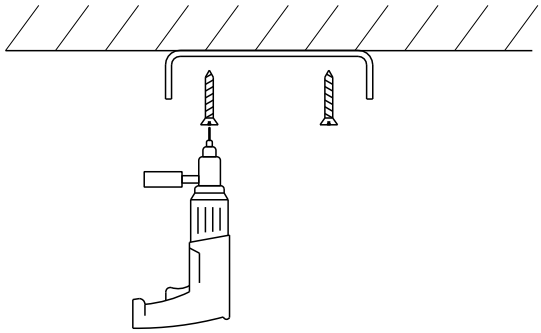

Step3.

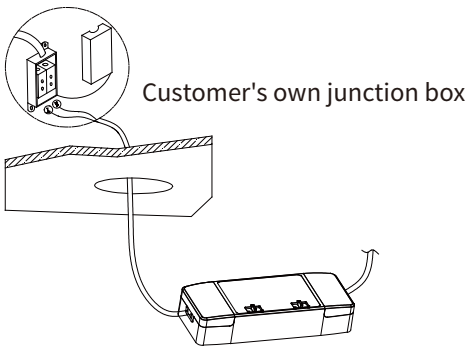

Step4. Tighten the light fixture onto the ceiling plate to ensure a secure installation.

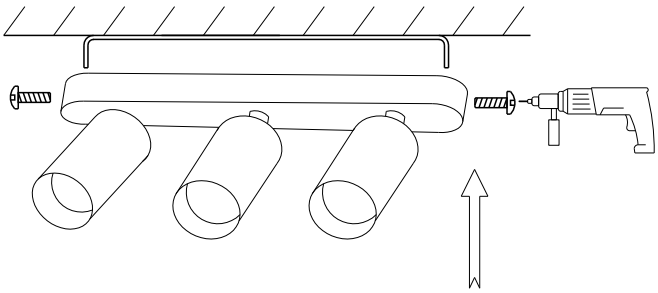

Step5. Installation Complete

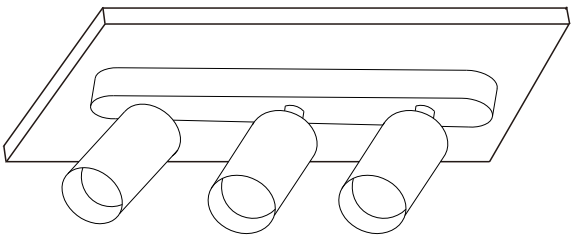

Step6. Make sure the downlight fixed tightly in ceiling, turn on the power

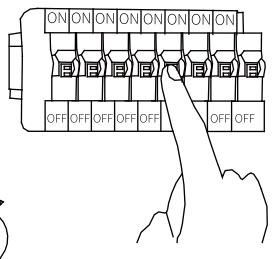

Turn on the switch

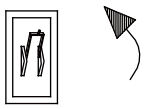

Caution: Plese note that DO NOT use this product in the following places/application.

1.The place has a large quantity of chemical corrosive substance,such as:chemical plant and stockyard etc.
2.The place has poor temperature conditions,large-scale temperature variation ,which would easily lead to broken and damage the product,the applicable operating temperature is between-20 and 40 degrees.